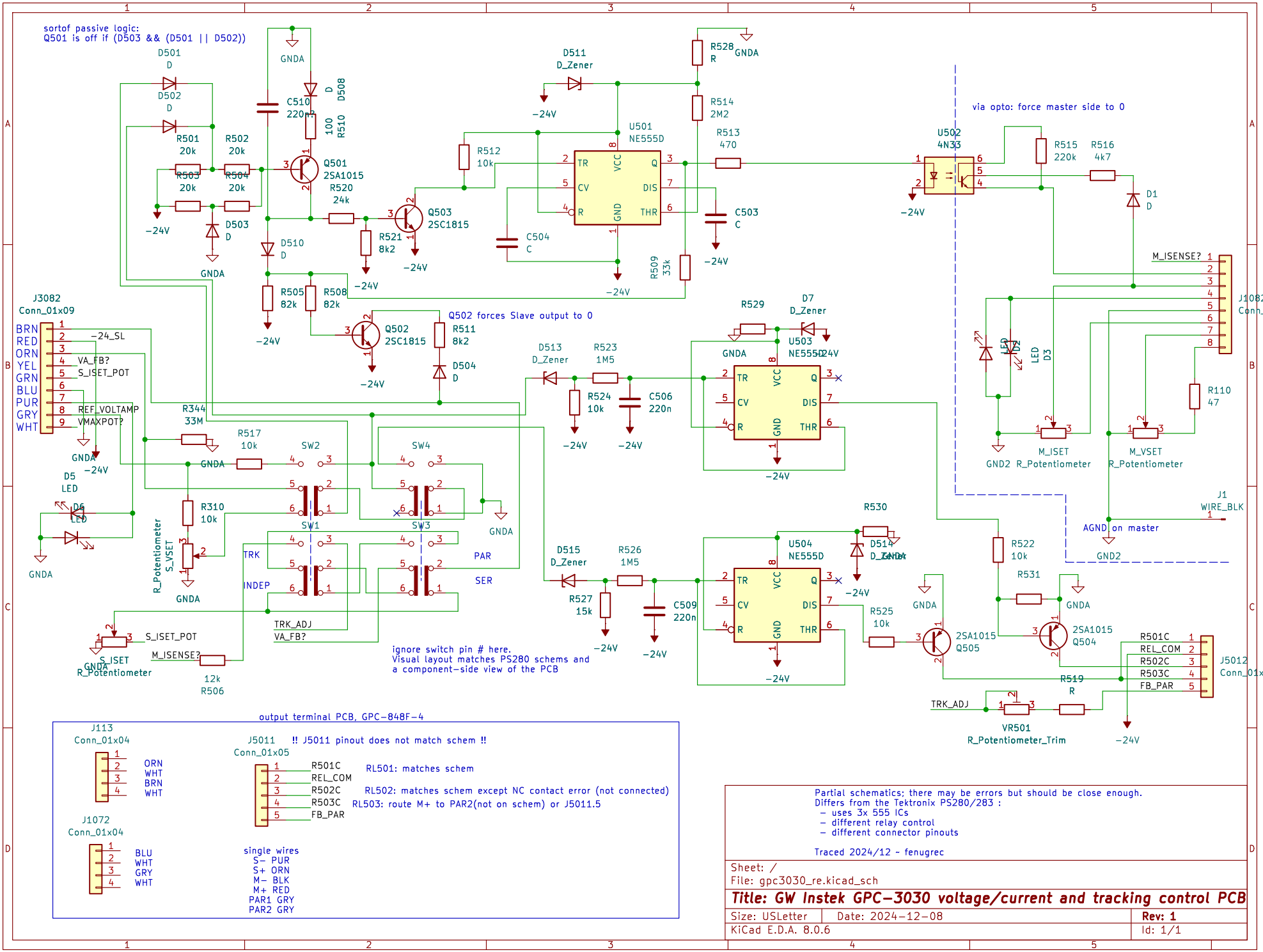
sortof passive logic:
Q501 is off if (D503 && (D501 || D502))
D501 D
D502 D
R501 20k
R502 20k
R503 20k
R504 20k
D503 D
GNDA
C510 220n
D508 D
R510 100
Q501 2SA1015
R520 24k
D510 D
R505 82k
R508 82k
Q502 2SC1815
R511 8k2
D504 D
Q502 forces Slave output to 0
R521 8k2
Q503 2SC1815
R512 10k
D511 D_Zener
U501 NE555D
TR CV R VCC GND Q DIS THR
C504 C
R509 33k
R528 R
R514 2M2
R513 470
C503 C
U502 4N33
via opto: force master side to 0
R515 220k
R516 4k7
D1 D
M_ISENSE?
J1082 Conn_01x08
LED D3
R110 47
M_ISET R_Potentiometer
M_VSET R_Potentiometer
GND2
J1 WIRE_BLK
AGND on master
J3082 Conn_01x09
BRN RED ORN YEL GRN BLU PUR GRY WHT
−24_SL
VA_FB?
S_ISET_POT
REF_VOLTAMP
VMAXPOT?
R344 33M
R517 10k
SW2
SW4
SW1
SW3
D5 LED
D6 LED
R310 10k
R_Potentiometer S_VSET
TRK
INDEP
PAR
SER
TRK_ADJ
VA_FB?
S_ISET R_Potentiometer
M_ISENSE?
12k R506
D513 D_Zener
R523 1M5
R524 10k
C506 220n
R529
D7 D_Zener
U503 NE555D
D515 D_Zener
R526 1M5
R527 15k
C509 220n
U504 NE555D
R530
D514 D_Zener
R525 10k
2SA1015 Q505
R522 10k
R531
2SA1015 Q504
R501C
REL_COM
R502C
R503C
FB_PAR
J5012 Conn_01x05
R519 R
TRK_ADJ
VR501 R_Potentiometer_Trim
−24V
ignore switch pin # here.
Visual layout matches PS280 schems and
a component−side view of the PCB
output terminal PCB, GPC−848F−4
J113 Conn_01x04
ORN
WHT
BRN
WHT
J1072 Conn_01x04
BLU
WHT
GRY
WHT
J5011 Conn_01x05
!! J5011 pinout does not match schem !!
R501C
REL_COM
R502C
R503C
FB_PAR
RL501: matches schem
RL502: matches schem except NC contact error (not connected)
RL503: route M+ to PAR2(not on schem) or J5011.5
single wires
S− PUR
S+ ORN
M− BLK
M+ RED
PAR1 GRY
PAR2 GRY
Partial schematics; there may be errors but should be close enough.
Differs from the Tektronix PS280/283 :
− uses 3x 555 ICs
− different relay control
− different connector pinouts
Traced 2024/12 ~ fenugrec
Sheet: /
File: gpc3030_re.kicad_sch
Title: GW Instek GPC−3030 voltage/current and tracking control PCB
Size: USLetter
Date: 2024−12−08
Rev: 1
KiCad E.D.A. 8.0.6
Id: 1/1